| Parts List | | | | |
|---|---|---|---|---|
| ITEM | QTY | PART No. | DESCRIPTION | SNProfile |
| 1 | 1 | BC0256 | Seal ring 2" 602 / 1002 / 1502 F Union HN900 (HNBR) Material | 03 - Batch - Order Nr. and Expire Date |
| 2 | 1 | BC0249 | Ø80 SP Stab Body 10K Interv 2" fig. 1502 Fem wJ-Lock Super Duplex | 02 - SN by PO nr. and Heat nr. |
| 3 | 1 | BB9928 | Fishtail Handle for Ø80 Stab | 06 - Serial nr. |
| 4 | 2 | BA2311 | ROV Handle Bracket | 02 - SN by PO nr. and Heat nr. |
| 5 | 1 | BA1823 | J-Lock Bolt | 02 - SN by PO nr. and Heat nr. |
| 6 | 1 | BA1306 | Guide Nose Ø80 | 06 - Serial nr. |
| 7 | 2 | 104582 | Ø80 Stab Seal RU15-PEEK | 03 - Batch - Order Nr. and Expire Date |
| 8 | 4 | 100253 | M10x25 Socked Head Bolt DIN 912 A4-80 | 01 - No Material Tracking |

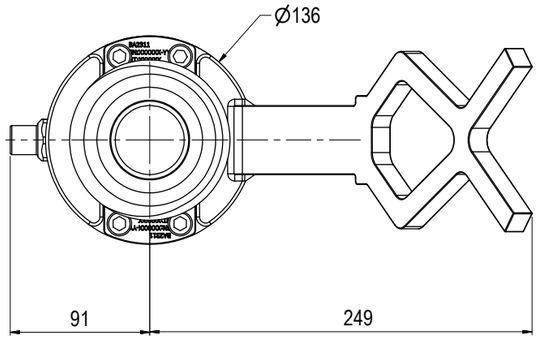


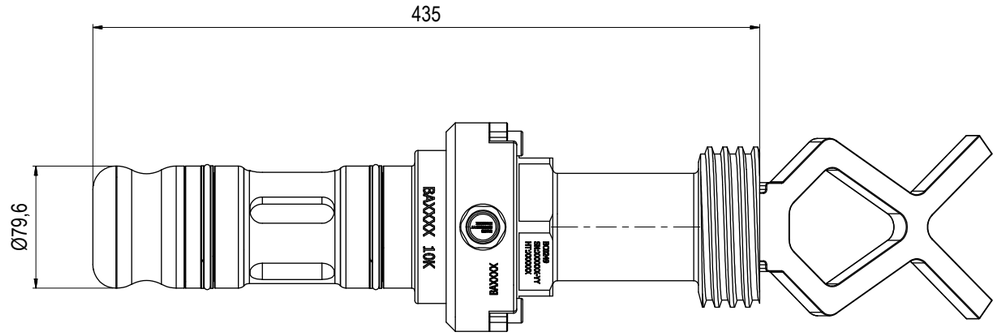


NOTE 1
ITEM TO BE MARKED WITH
ARTICLE AND SERIAL NUMBER.
EXAMPLE:
BC0250
SN: XXXXXX-YYY

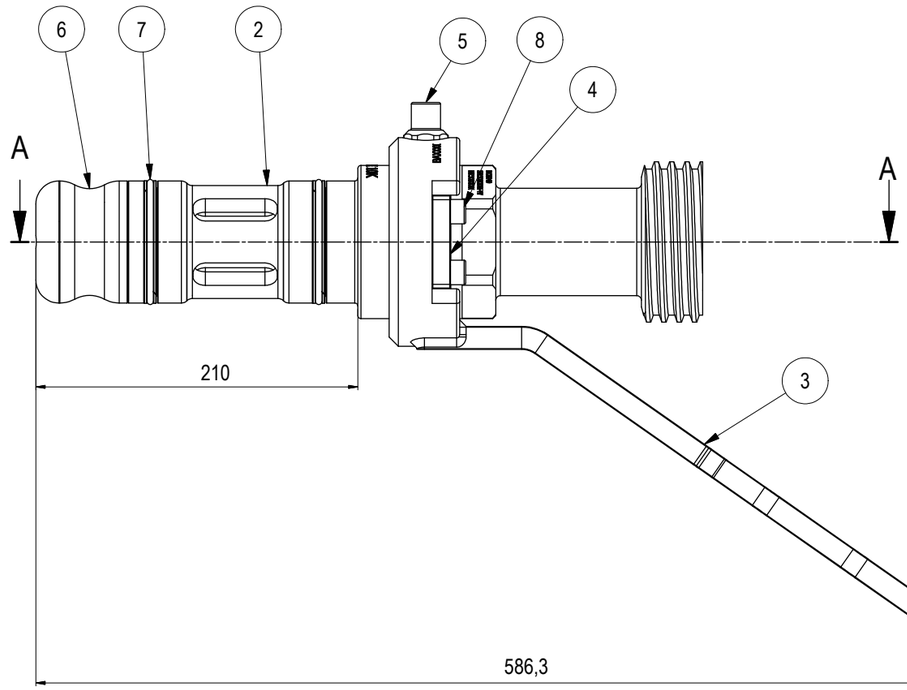


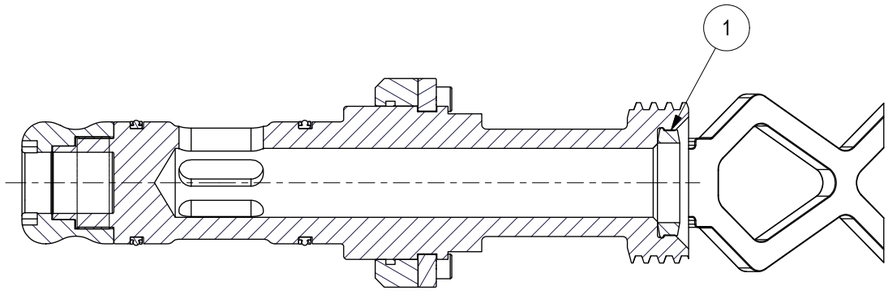


SECTION A-A

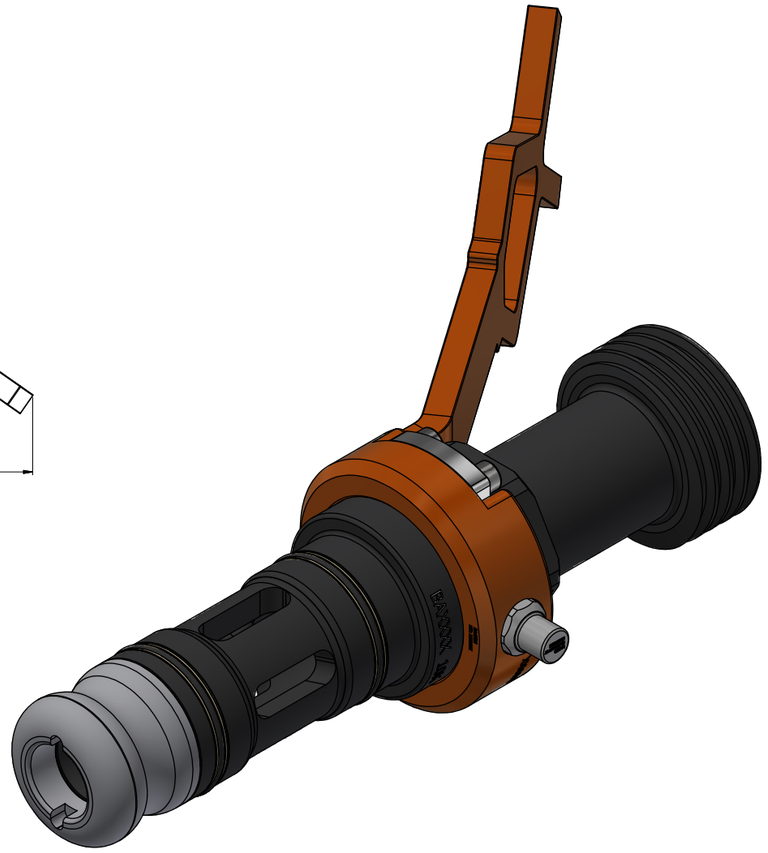

| Rev. | Date | Reason for issue | Revision change | Made | Chk'd | Appr. |
|---|---|---|---|---|---|---|
| 02 | 16.1.2024 | 9-IFU (Issued for Use) | | HNJ | TAN | HNJ |
| 01 | 28.9.2023 | 2-IFT (Issued for Tender) | | HNJ | NA | NA |

BLUE LOGIC

This Drawing is the Property of Blue Logic AS © and must Not be Loaned, Reproduced or Transferred to others without written Permission

Dwg Scale: NTS
Dwg Proj:
Dwg Format: A3

Drawing title: Ø80 SP Stab 10k Interv 2" fig. 1502 F w/Fishtail wJ-Lock SD Body

Drawing number: BC0250



Rev. 02